TRANSIT BUS FIRE SUPPRESSION SYSTEM

AMEREX®



Quality is Behind the Diamond®

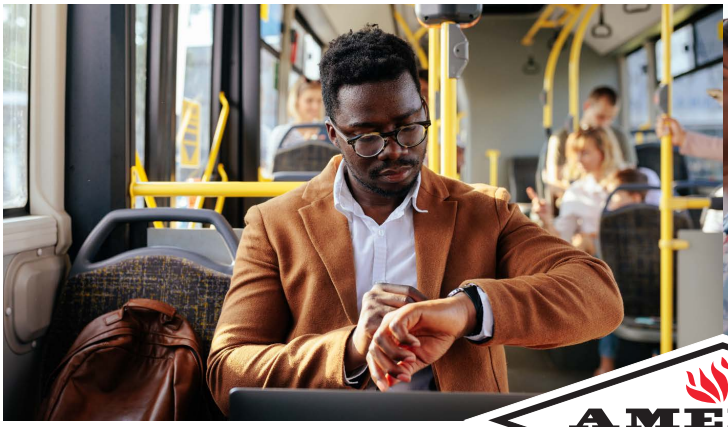



BECAUSE IT **ABSOLUTELY MATTERS**

Amerex vehicle fire suppression systems are manufactured at our facility in Trussville, Alabama and meet the requirements of the "Buy America Act." Our products are designed and manufactured in the USA so we can provide you with the quality and flexibility your Transit Fleet demands—when you need it most.

QUALITY WITHOUT COMPROMISE AND EXPERIENCED INNOVATION

The best Transit Fleets are uncompromising when it comes to the quality and reliability of their vehicles. At Amerex, we believe the same should be true when it comes to protecting your most important assets, your passengers. With the experience of more than 100,000 fire suppression systems sold, the Amerex vehicle fire suppression team has developed the most reliable fire suppression systems in the industry. The Amerex Fire Suppression Systems provide Fast and Reliable Fire Protection.

Quality **cannot** be sacrificed, so choose Amerex.

WHY STORED PRESSURE?

1. Prevents moisture from entering the cylinder and contamination of the fire suppression agent
2. Agent is fluidized and ready to go when needed; no need for delays while the cylinder is being pressurized from an outside source
3. Stored pressure cylinders have a pressure gauge which allows maintenance personnel to verify readiness
4. Stored pressure cylinders can also be fitted with a pressure switch which detects a low pressure condition and notifies the operator via the control panel

Note: The illustrations shown within are conceptual only and not intended for system design. A complete hazard analysis and risk assessment should be performed on the vehicle to determine the most probable ignition sources; along with the fire characteristics and quantity of the various fuels exposed to those ignition sources. Final placement of the fire suppression components should be based on the hazard analysis and in coordination with the end user.

The AMEREX BENEFITS SUPPRESSION AGENT OPTIONS

We know that all transit buses are not the same, so we offer different suppression agent options to protect your fleet needs:

- **Dry Agent Systems** - provide the fastest fire knockdown as well as getting into those hard to reach areas where fire may hide.

- **AVT™ Plus** from Amerex is the preferred fire suppression system in the Transit bus market. To meet the growing need for an environmentally friendly solution, Amerex developed AVT™ Plus. The discharge has minimal residue, resulting in a quick, effortless cleanup with no effect on the environment and a zero Ozone Depletion Level (ODP). AVT™ Plus is the ideal choice for engine compartments in vehicles, which require a cleaner solution in the event of a discharge. It is suitable for Class A, Class B, and Class C fire hazards found in engine compartments. AVT™ Plus has been thoroughly 3rd party tested for engine compartment applications and ancillary areas.

Dry Agent Cylinders





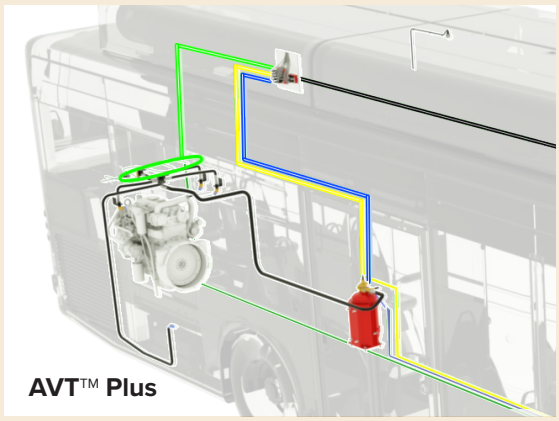

AVT™ Plus

WHY AMEREX?

QUALITY As a product of the USA, we provide higher quality products and ship them to you quickly.

EXPERIENCE At Amerex, our focus is on protecting buses and the people who travel in them. We protect more buses in North America than all of the other manufacturers combined. You want an experienced driver, choose the most experienced fire suppression manufacturer.

INNOVATION Our dedicated vehicle systems engineering team uses advancements in technology to develop customized solutions for your school bus fleet. We continually invest back into our products to progress our products and the industry as a whole.

DESIGNED AND MANUFACTURED IN THE USA

The AMEREX BENEFITS
CONTROL PANEL OPTIONS





FEATURES OF THE 17 SERIES PANEL

- Two detection zones and one releasing zone
- 24-hour battery backup protection
- Diagnostic flash code for easy troubleshooting
- Programmable discharge and alarm relays

FEATURES OF THE SMVS PANEL

- Integrated manual release on panel
- One hour battery backup if power is lost
- Diagnostic flash code for easy troubleshooting
- Programmable discharge and alarm relays

DID YOU KNOW?

Event logs can be downloaded and provided to the vehicle owner to verify testing has been completed and kept as part of that units' permanent record.



The AMEREX BENEFITS
FIRE DETECTION OPTIONS



LINEAR HEAT DETECTION cables have long been the industry standard and provide a continuous heat detection cable run inside the hazard area. The Amerex Benefit has amped up the traditional cable with a more robust abrasion resistant outer jacket and factory installed connectors for reliability and ease of service. The cable is also available with a stainless steel wire protective covering for extreme environments.



SPOT HEAT DETECTORS are available in three different preset temperature settings for flexibility and provide rapid heat detection and system activation. Spot Heat Detectors have factory installed connectors for reliability and ease of installation and service.

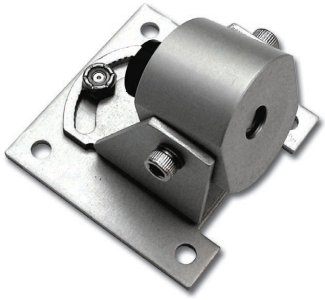

The **AMEREX OPTICAL FLAME DETECTOR TECHNOLOGY** is the fastest responding flame detection in the industry, responding to fire within seconds. Faster response time means less damage and less downtime. Amerex Optical Detectors "see" the fire by recognizing the light wavelength patterns given off by the hydrocarbon fire.



FAST FACT

Multiple types of detectors can be used on the same vehicle to provide faster response in high risk areas.

The AMEREX BENEFITS REAR

AMEREX DRY CHEMICAL FIRE SUPPRESSION SYSTEMS

- Are an FM Approved, pre-engineered suppression system designed specifically for protection of buses
- Each system uses vertical and horizontal stored pressure agent cylinders discharging Dry Chemical agent in the engine compartment
- Each system provides rapid fire knockdown to mitigate fire damage and allows time to evacuate the bus
- Each system can operate within temperature ranges from -65F to 150F (-54C to 65C)

DID YOU KNOW?

Dry chemical is the most effective agent for knocking down a fire and getting into the hard to reach areas in the engine compartment where fire can still exist.

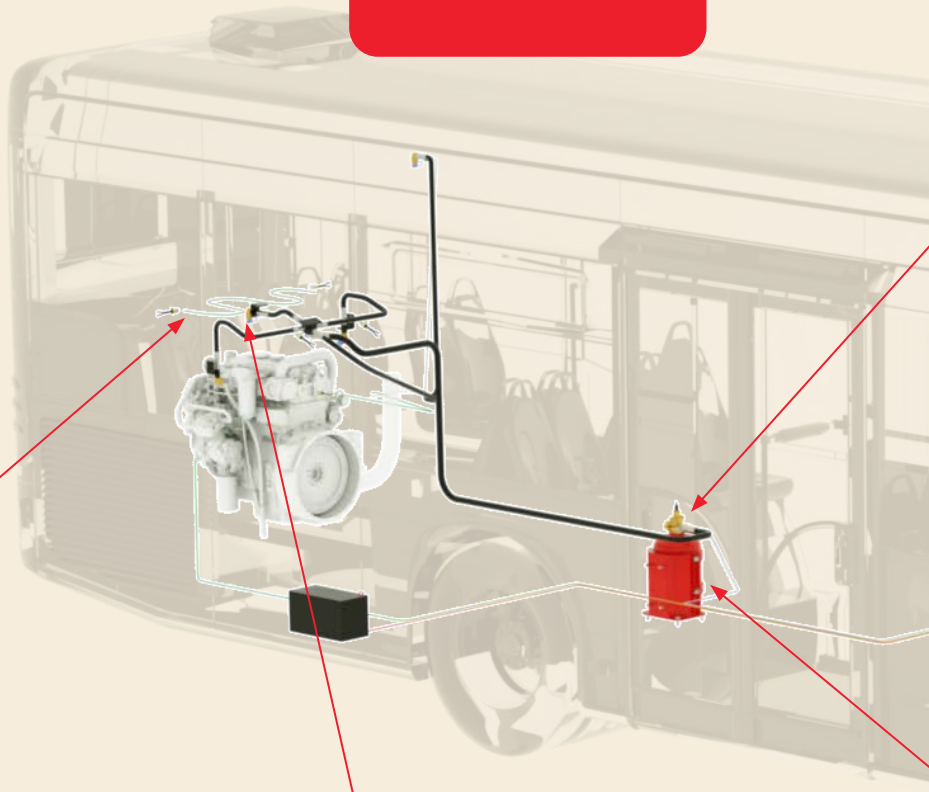



Detection

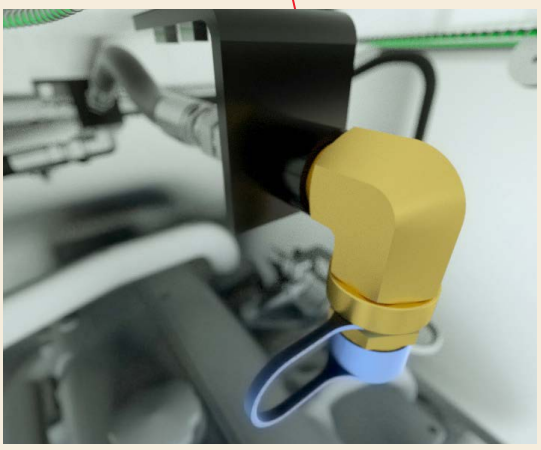

Discharge Nozzle

FM APPROVED

ENGINE BUS DRY CHEMICAL SYSTEMS

Discharge Blow-off Adapter

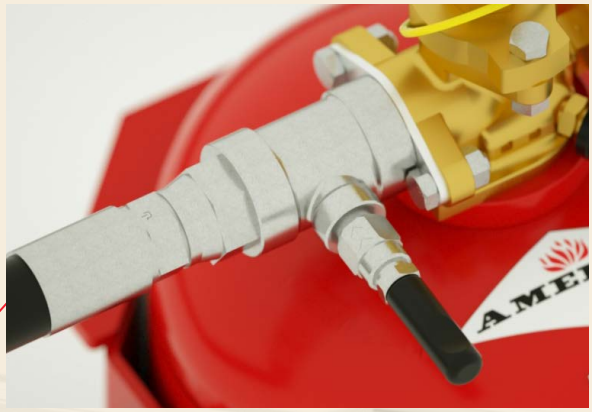

Manual Release



FAST FACT

The AMEREX dry chemical system is also highly effective on combustible Class A materials.



Agent Cylinder



17 Series Panel

The AMEREX BENEFITS COMBINATION

AMEREX FIRE SUPPRESSION AND GAS DETECTION SYSTEMS

- Combines fire suppression and gas detection on one SafetyNet programmable control system
- AMT–Automatic Maintenance Testing mode to significantly reduce maintenance time
- Records 4000 events that are time and date stamped, downloadable for easy troubleshooting and incident investigation
- Gas sensors provide detection of combustible gas in concentrations below the Lower Flammability Limit (LFL) to eliminate wasteful leaks and protect lives

DID YOU KNOW?

AMEREX control panels have programmable discharge delays from 0-15 seconds in 5 second increments.

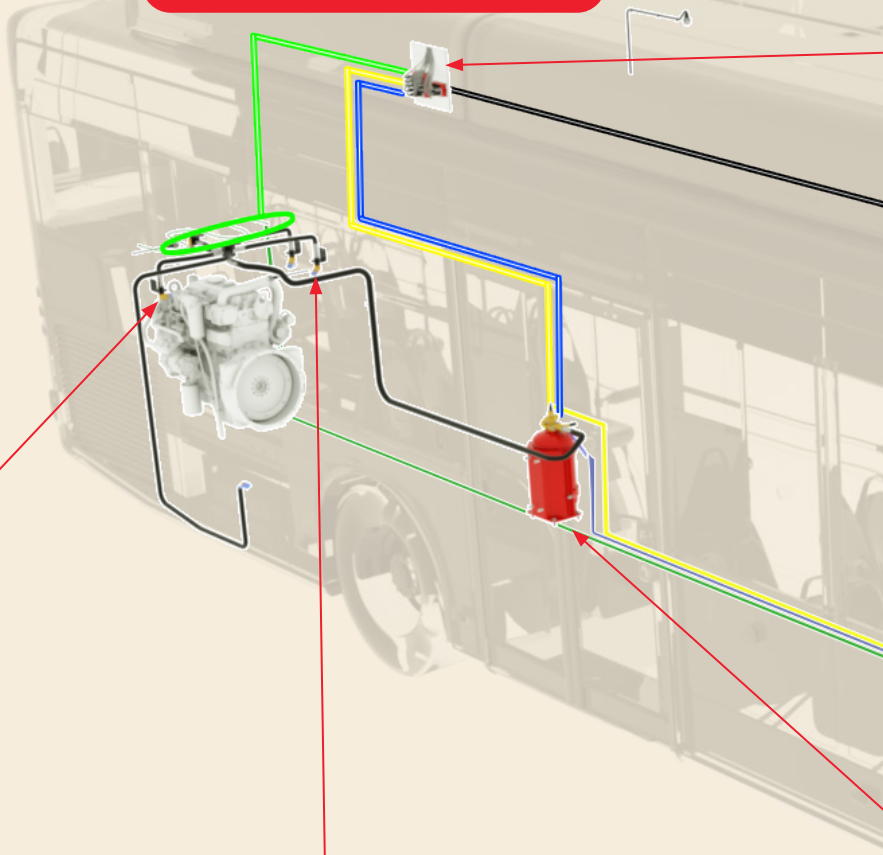

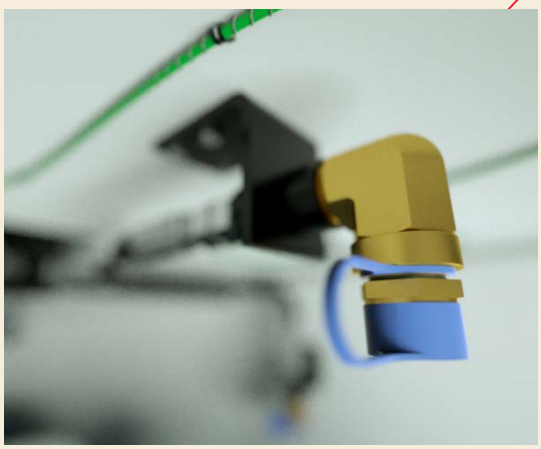

Discharge Nozzle

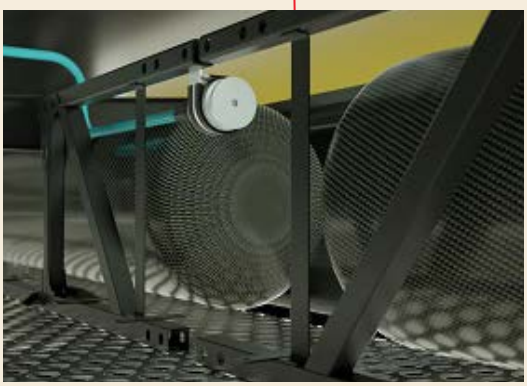

Gas Sensor

FM APPROVED

FIRE SUPPRESSION AND GAS DETECTION

SafetyNet Driver Panel





SafetyNet Display Panel

FAST FACT

Fires on transit buses can reignite after a fire is suppressed if the flammable fuel source is not shut off, or the ignition sources aren't cooled.



Agent Cylinder

Manual Release



The AMEREX BENEFITS SMALL BUS SYSTEM

AMEREX SMALL BUS SUPPRESSION SYSTEMS

- Designed specifically for the small cutaway style buses to provide a cost effective option
- Designed and sold as a kit to reduce costs and simplify installation
- FM Approved system to provide piece of mind
- Integrated manual release on the control panel for a compact installation



SMVS Control Panel

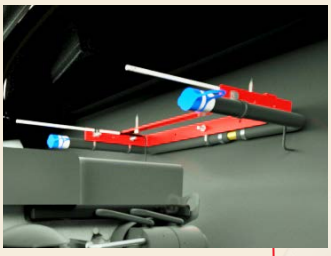

Nozzles and Detection



SMVS Cylinder

DID YOU KNOW?

All Amerex fire suppression system control panels have a battery backup integrated into the panel to provide power in the event of vehicle power loss.

why AMEREX?

QUALITY
Amerex didn't become a global market leader overnight. Our business has grown year after year based on our products' reputation for performance and durability in even the most rugged environments.

INNOVATION
Because Amerex is independently owned and forward thinking, we are continuously innovating and investing for the benefit of our customers and those they serve.

SERVICE
Amerex was founded on a mutual appreciation for premium quality in products and customer service and the importance of interpersonal relations.

AMEREX®

Quality is Behind the Diamond®

7595 Gadsden Hwy. P.O. Box 81 Trussville, AL 35173 Ph: (205) 655-3271
www.amerex-fire.com webstore.amerex-fire.com customer.service@amerex-fire.com intl.sales@amerex-fire.com

© 2026 Amerex Corporation internationally recognized ISO 9001 and ISO 14001 registered firm

Amerex Fire Protection | Amerex Corporation | @Amerex Corporation | @Amerex Corp | @Amerex Corporation | Amerex