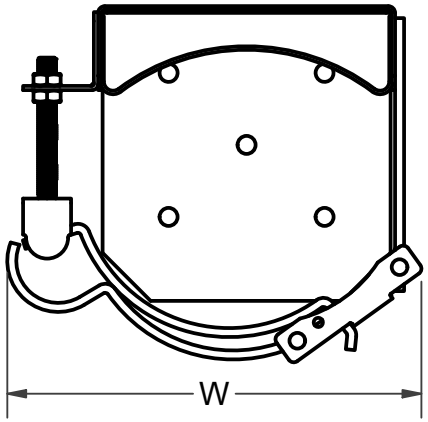

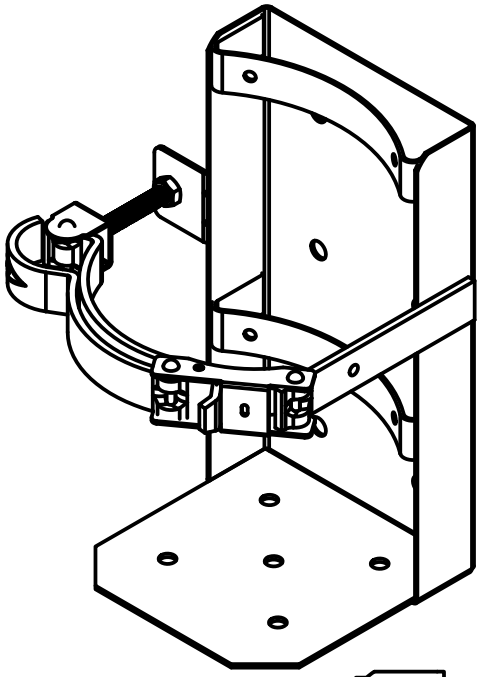

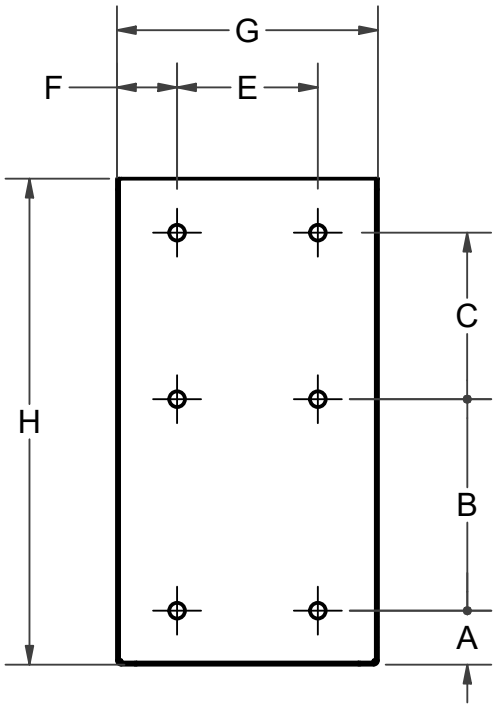

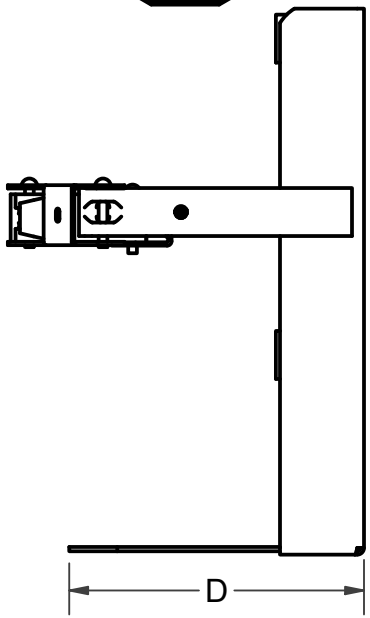

AMEREX BOX TYPE BRACKETS						
	807	809	810	811	812	895
A	$1\frac{3}{8}$	$1\frac{31}{64}$	$1\frac{1}{2}$	$2\frac{1}{4}$	$1\frac{7}{16}$	SEE PAGE 2
B	$3\frac{1}{2}$	$4\frac{1}{4}$	$5\frac{7}{8}$	$5\frac{1}{8}$	$4\frac{1}{2}$	
C	$3\frac{1}{2}$	$3\frac{5}{8}$	$4\frac{5}{8}$	$4\frac{5}{8}$	$3\frac{1}{2}$	
E	$2\frac{1}{2}$	$2\frac{3}{4}$	$3\frac{29}{32}$	$5\frac{1}{8}$	3	
F	$1\frac{1}{32}$	$1\frac{3}{8}$	$1\frac{43}{64}$	$1\frac{1}{2}$	$1\frac{19}{32}$	
G	$4\frac{35}{64}$	$5\frac{1}{2}$	$7\frac{1}{4}$	$8\frac{3}{16}$	$6\frac{3}{16}$	
H	$10\frac{3}{8}$	$11\frac{5}{16}$	$13\frac{1}{2}$	$17\frac{1}{2}$	$11\frac{3}{8}$	
W	$6\frac{3}{4}$	$7\frac{3}{8}$	$9\frac{3}{8}$	$9\frac{3}{4}$	$8\frac{5}{8}$	
D	$5\frac{1}{8}$	$5\frac{3}{8}$	$7\frac{1}{8}$	$8\frac{1}{8}$	$6\frac{3}{16}$	

NOTES:

ALL BRACKET BACK HOLE DIAMETERS ARE $\frac{7}{16}$".

HOLE PATTERN FOR THE 809G IS IDENTICAL TO 809.

HOLE PATTERNS FOR THE 810CG AND 810G ARE IDENTICAL TO 810.

HOLE PATTERN FOR THE 811G IS IDENTICAL TO 811.

THIS DRAWING IS THE EXCLUSIVE AND CONFIDENTIAL PROPERTY OF AMEREX CORP. IT SHALL NOT BE DUPLICATED, USED OR DISCLOSED TO OTHERS WITHOUT THE EXPRESS WRITTEN CONSENT OF AMEREX CORPORATION.

REV	DRAWING CHANGE	BY	ECN#	DATE
B	ADDED 895 BRACKET PAGE 2	TP	M005949	8/27/26
A	UPDATED 809 AND 811 DIMENSIONS	GJ		11-14-11

CRITICAL INSPECTION ITEMS DENOTED BY ○

TOLERANCES UNLESS OTHERWISE SPECIFIED

FRAC. ` 0.020 | 2 PL. DEC. ` 0.010 | 3 PL. DEC. ` 0.003 | TIR

AMEREX CORPORATION — TRUSSVILLE, ALABAMA

DRAWN BY	SHEET NUMBER	Title	DWG NO.	REV.
G.JONES	1 OF 2	CHART HOLE PATTERN HD BKT	21490	B
SCALE 3/16	DATE 6/7/2011			

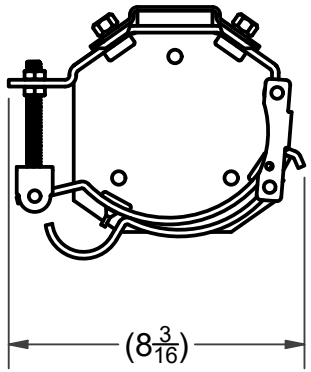

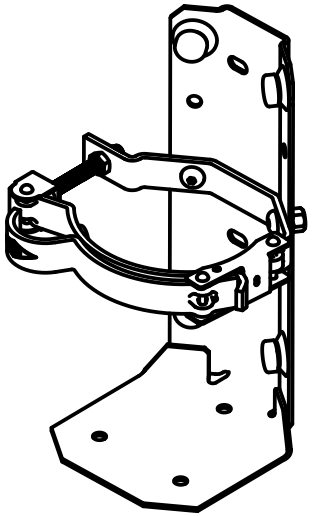

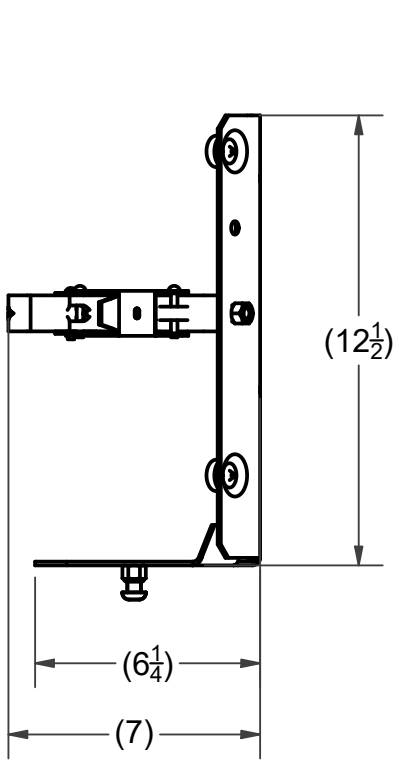

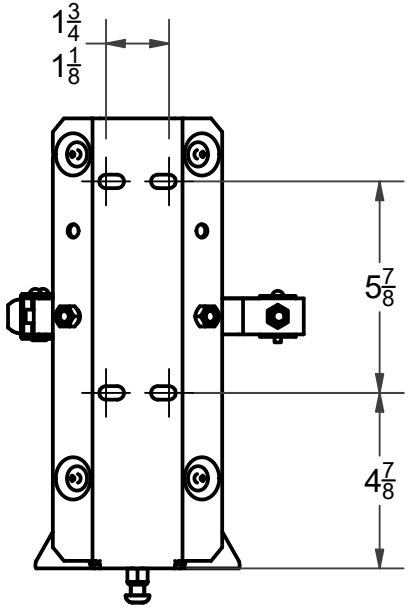

NOTES:

HOLE PATTERN FOR 895 BRACKET ASSEMBLY.
ALL BRACKET BACK HOLE SLOT DIAMETERS ARE 3/8".

THIS DRAWING IS THE EXCLUSIVE AND CONFIDENTIAL PROPERTY OF AMEREX CORP. IT SHALL NOT BE DUPLICATED, USED OR DISCLOSED TO OTHERS WITHOUT THE EXPRESS WRITTEN CONSENT OF AMEREX CORPORATION.

AMEREX CORPORATION TRUSSVILLE, ALABAMA

DRAWN BY KW	SHEET NUMBER 2 OF 2	Title BKT ASY 895 BK	DWG NO. 21490	REV. B
SCALE 3/16	DATE 2/27/2006			

CRITICAL INSPECTION ITEMS DENOTED BY ○

TOLERANCES UNLESS OTHERWISE SPECIFIED

FRAC. ` 0.020	2 PL. DEC. ` 0.010	3 PL. DEC. ` 0.003	TIR